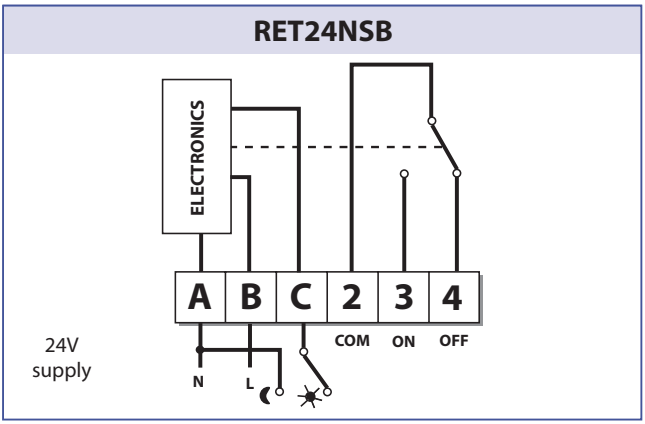Wiring Diagram for RET24NSB